Index

Page	Schematics Page Name
01	Cover Sheet / Revision History
02	Top Level
03	Input
04	Phase
05	Output
06	Miscellaneous

01_Revision_History.SchDoc

Revision History

Rev.	Rel.	Date	Author	Description	Page(s)
1.0.0	A	2026-02-09	EF	- Initial release	6

RIC70847EVAL1

Default_Assembly

A

IR HiRel
An Infineon Technologies Company

IR HiRel Products

HiRel S&M M TM

101 N Pacific Coast Highway El Segundo, CA 90245

02/2026

Top Leve
Top Level.SchDoc

LEGAL DISCLAIMER
THE INFORMATION GIVEN IN THIS DOCUMENT IS GIVEN FOR ILLUSTRATING PURPOSES ONLY. THE RECIPIENT OF THIS DOCUMENT MUST VERIFY ANY FUNCTION DESCRIBED HEREIN IN THE REAL APPLICATION. INFINEON TECHNOLOGIES HEREBY DISCLAIMS ANY AND ALL WARRANTIES AND LIABILITIES OF ANY KIND (INCLUDING WITHOUT LIMITATION WARRANTIES OF NON-INFRINGEMENT OF INTELLECTUAL PROPERTY RIGHTS OF ANY THIRD PARTY) WITH RESPECT TO ANY AND ALL INFORMATION GIVEN IN THIS DOCUMENT.

IR HiRel Products
HiRel S&M M TM
101 N Pacific Coast Highway El Segundo, CA 90245

Title	RIC70847EVAL1		
Variant	Default_Assembly	Approved	<Appr.>
Size: A3	Document Name: 01_Revision_History.SchDoc	Rel.: EF	Rev.: A
Author: Eric Faraci			
Date: 2/9/2026	Time: 8:03:26 AM	SVN Revision: Not in version control	

© Infineon Technologies AG 2026. All Rights Reserved.

Sheet of

Top Level.SchDoc

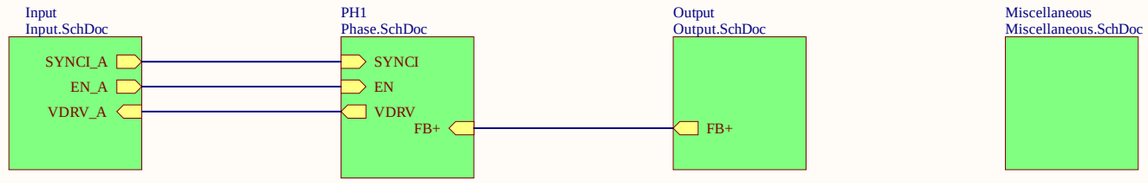

IR HiRel Products
HiRel S&M M TM
101 N Pacific Coast Highway El Segundo, CA 90245

Title	RIC70847EVAL1		
Variant	Default_Assembly	Approved	<Appr.>
Size: A3	Document Name: Top Level.SchDoc	Rel. EF	Rev. A
Author: Eric Faraci			
Date: 2/9/2026 Time: 8:03:29 AM	SVN Revision: Not in version control		

© Infineon Technologies AG 2026. All Rights Reserved.
Sheet of

Input.SchDoc

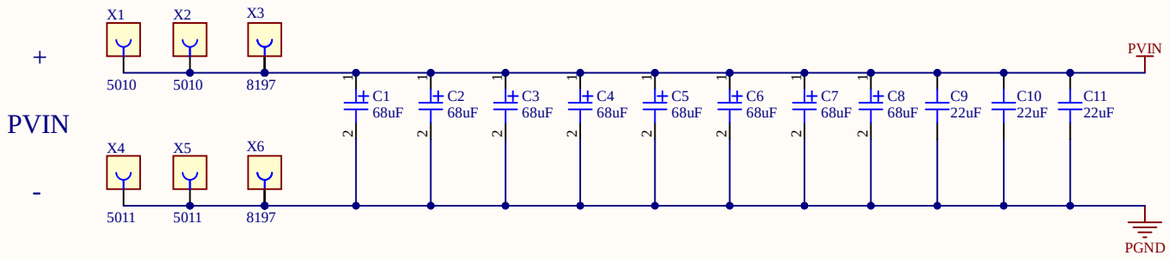

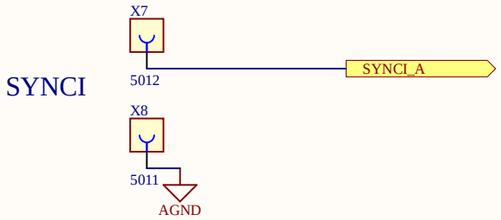

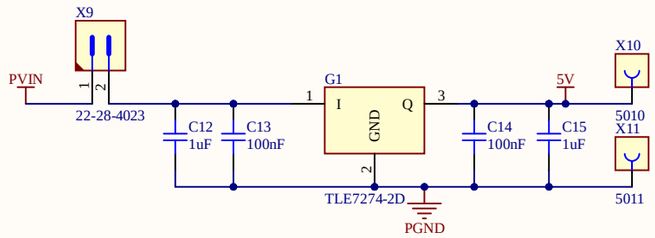

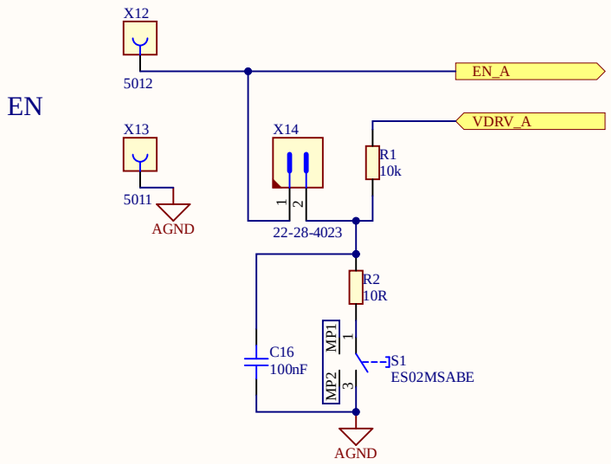

IR HiRel Products
HiRel S&M M TM
An Infineon Technologies Company
101 N Pacific Coast Highway El Segundo, CA 90245

Title	RIC70847EVAL1		
Variant	Default_Assembly	Approved	<Appr.>
Size: A3	Document Name: Input.SchDoc	Rel. EF	Rev. A
Author: Eric Faraci			
Date: 2/9/2026 Time: 8:03:27 AM	SVN Revision: Not in version control		
© Infineon Technologies AG 2026. All Rights Reserved.	Sheet of		

Phase.SchDoc

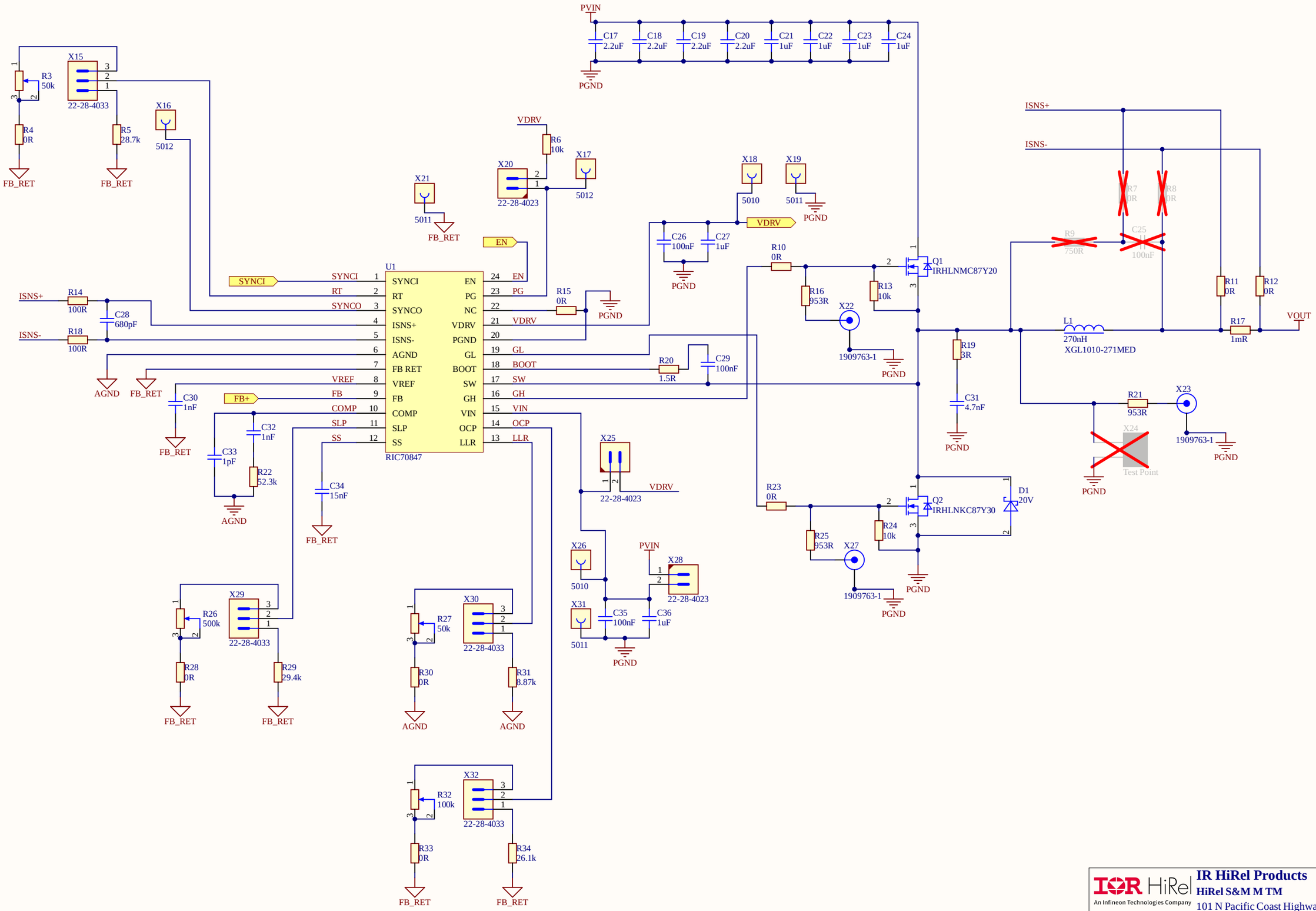

IR HiRel Products
HiRel S&M M TM
An Infineon Technologies Company
101 N Pacific Coast Highway El Segundo, CA 90245

Title	RIC70847EVAL1		
Variant	Default_Assembly	Approved	<Appr.>
Size: A3	Document Name: Phase.SchDoc	Rel. EF	Rev. A
Author: Eric Faraci			
Date: 2/9/2026 Time: 8:03:28 AM	SVN Revision: Not in version control		
© Infineon Technologies AG 2026. All Rights Reserved.	Sheet of		

Output.SchDoc

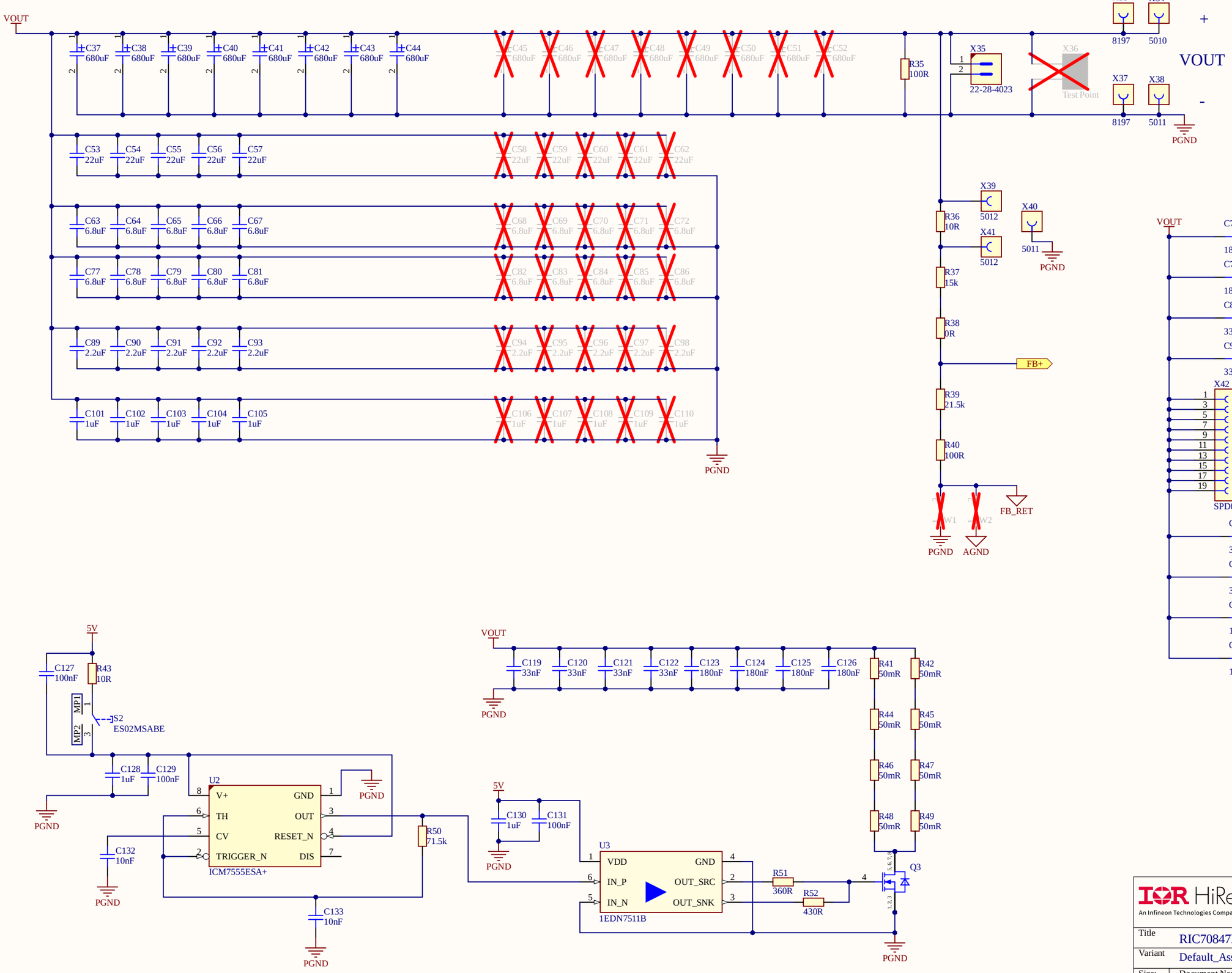

IR HiRel Products
HiRel S&M M TM
An Infineon Technologies Company
101 N Pacific Coast Highway El Segundo, CA 90245

Title	RIC70847EVAL1		
Variant	Default_Assembly	Approved	<Appr.>
Size: A3	Document Name: Output.SchDoc	Rel. EF	Rev. A
Author: Eric Faraci			
Date: 2/9/2026	Time: 8:03:28 AM	SVN Revision: Not in version control	

© Infineon Technologies AG 2026. All Rights Reserved.
Sheet of

Miscellaneous.SchDoc

Fiducial Markers

E1 E2 E3 E4

MP1 9434

MP2 9434

MP3 9434

MP4 9434

MP5 1903C

MP6 1903C

MP7 1903C

MP8 1903C

X44 X45

X46 X47

X48 X49

X50

IR HiRel Products
HiRel S&M M TM
An Infineon Technologies Company
101 N Pacific Coast Highway El Segundo, CA 90245

Title	RIC70847EVAL1		
Variant	Default_Assembly	Approved	<Appr.>
Size: A3	Document Name: Miscellaneous.SchDoc	Rel. EF	Rev. A

Author: Eric Faraci
Date: 2/9/2026 Time: 8:03:27 AM SVN Revision: Not in version control
© Infineon Technologies AG 2026. All Rights Reserved. Sheet of

IR HiRel
An Infineon Technologies Company

IR HiRel
An Infineon Technologies Company

HiRel S&M M TM

RIC70847EVAL1

Application Board

EASY 12345 A 02/2026

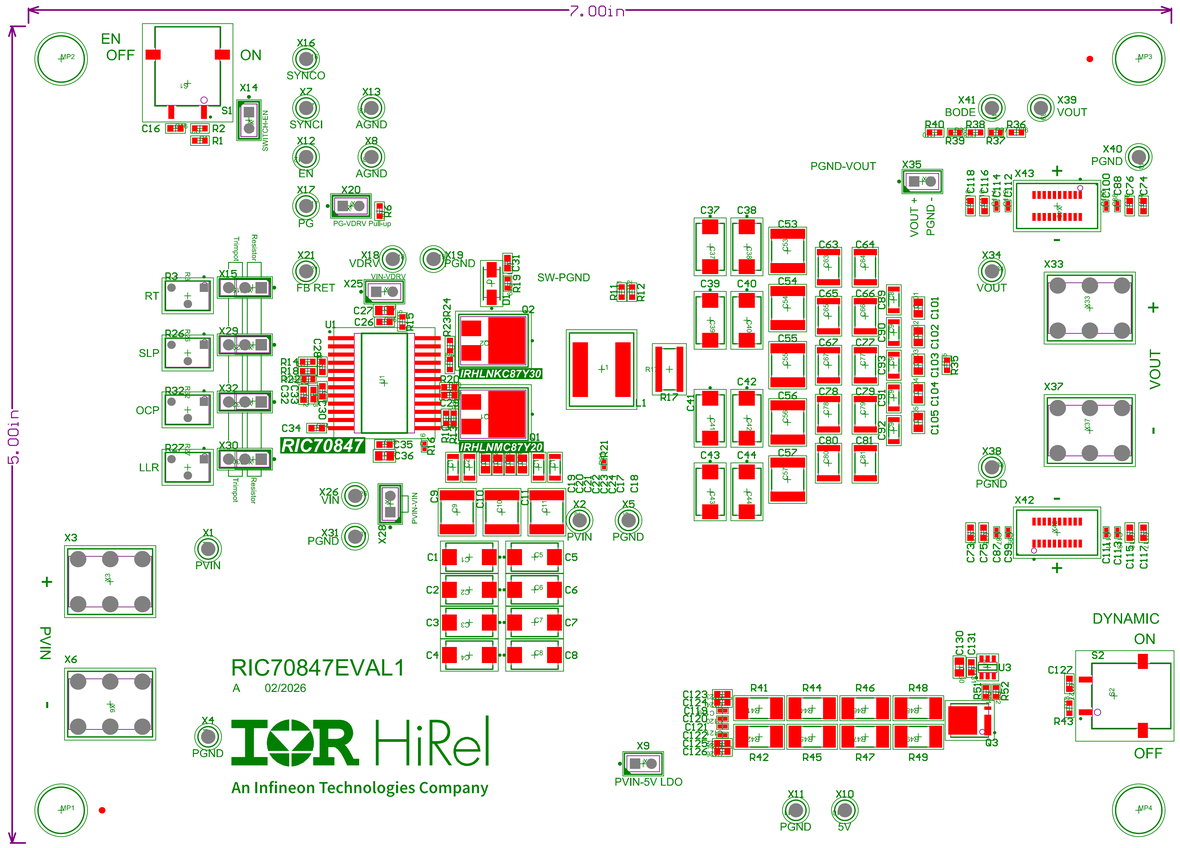

IR HiRel
An Infineon Technologies Company

IR HiRel Products
HiRel S&M M TM
101 N Pacific Coast Highway
El Segundo, CA 90245

ENGINEER:		TITLE: RIC70847EVAL1	
PCB DESIGNER: Eric Faraci			
DATE: 2/9/2026	PART NO.:	REL: A	REV: A
SVN REVISION: Not in version control	FILE NAME: PCB2.PcbDoc	APRV: EF	SCALE: 1:1

© Infineon Technologies AG 2026. All Rights Reserved.

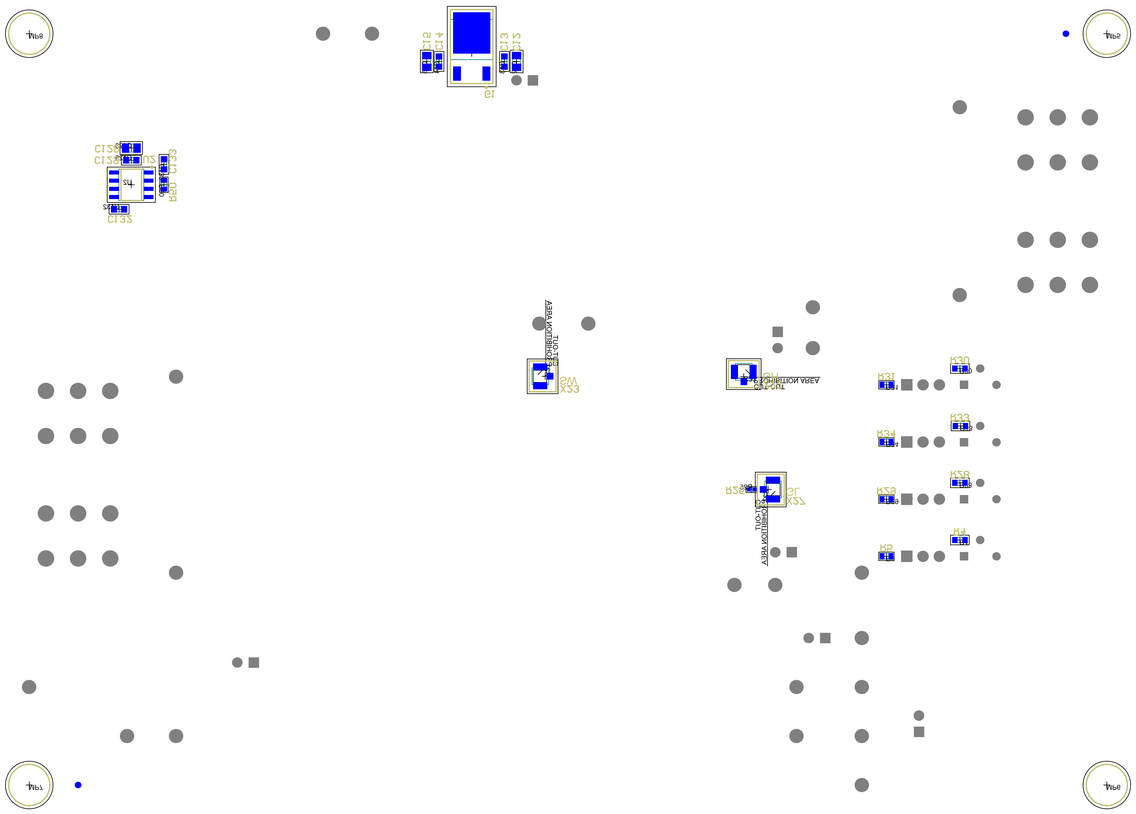
4hole
4hole
4hole
4hole
J1
J2
J3
J4
J5
J6
J7
J8
J9
J10
J11
J12
J13
J14
J15
J16
J17
J18
J19
J20
J21
J22
J23
J24
J25
J26
J27
J28
J29
J30
J31
J32
J33
J34
J35
J36
J37
J38
J39
J40